GLOW BRAKE-LIGHT E-BIKE

Instruction manual

Commuter Carrier

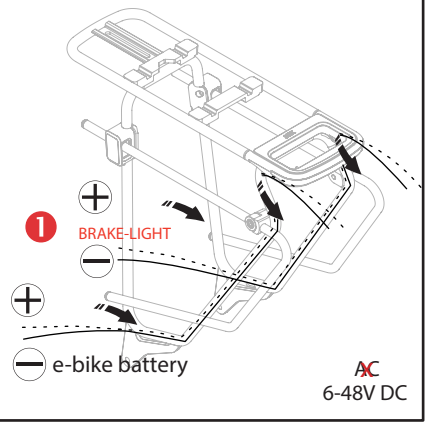

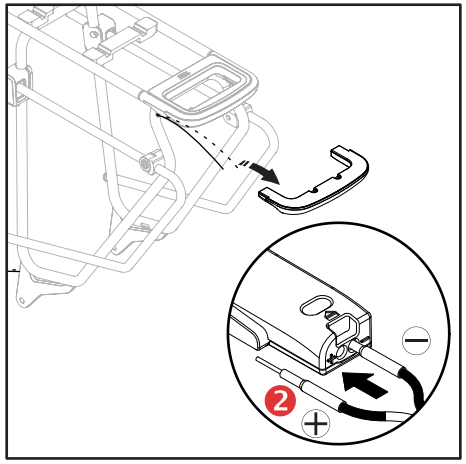

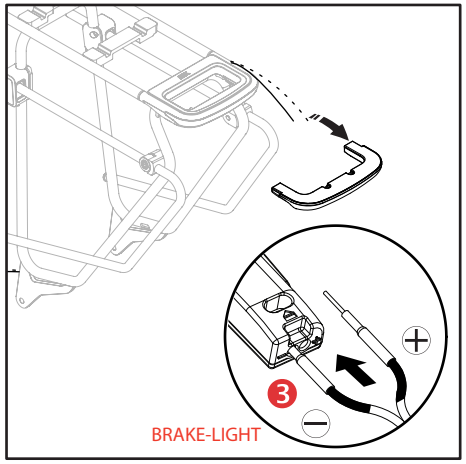

Option 1 w/o reflector

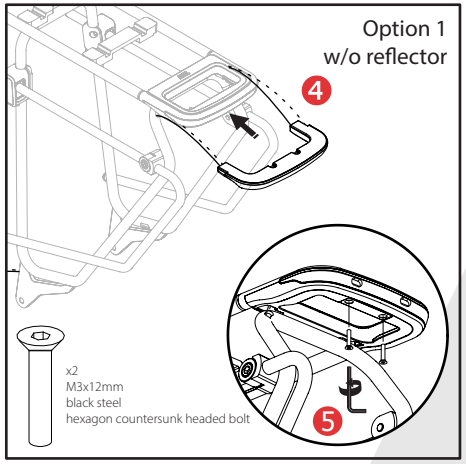

Option 2 w reflector

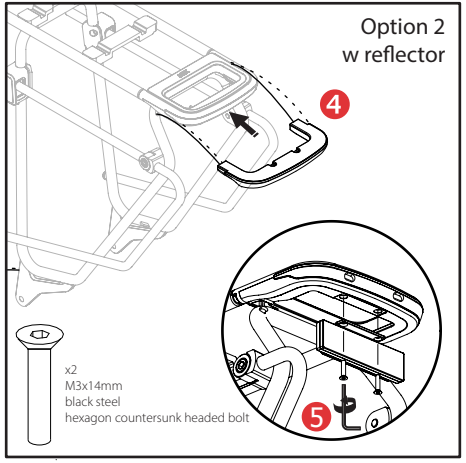

Maintenance

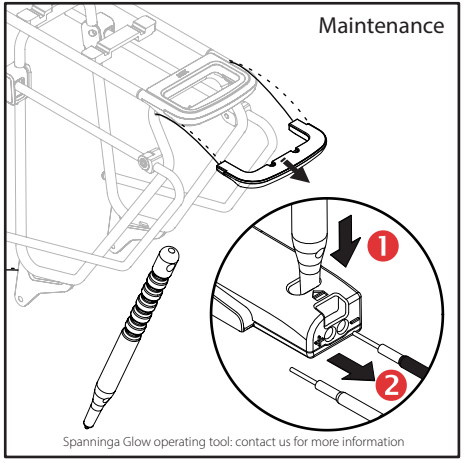

Spanninga Glow operating tool: contact us for more information

Wire recommendations

- 24AWG or 22AWG
- standard length: 1.2m or 1.5m / other TBD
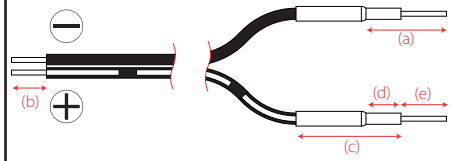
(a) standard finish pre-stripped & tinned on 11,5(±0,5)mm
(b) standard finish pre-stripped & tinned on 5(±0,5)mm
(c) shrink sleeve on 15(±0,5)mm
(d) wire coverage by shrink sleeve Ø 2mm on 5(±0,5)mm
(e) exposed wire Ø 0,7(±0,1)mm on 6.5(±0,5)mm