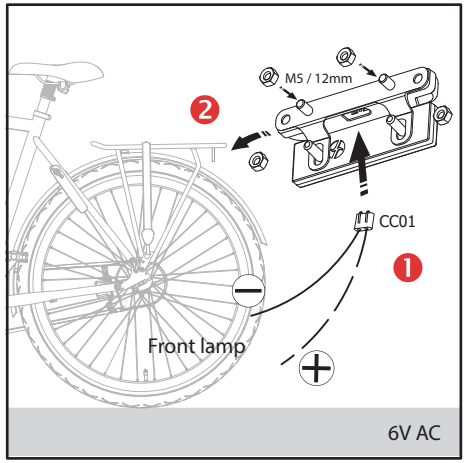

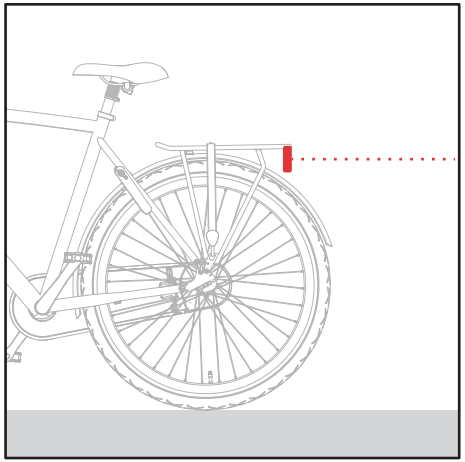

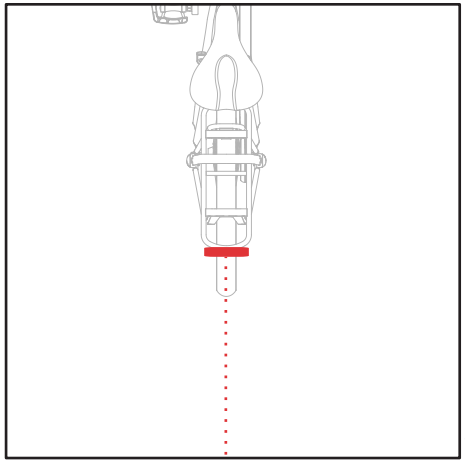

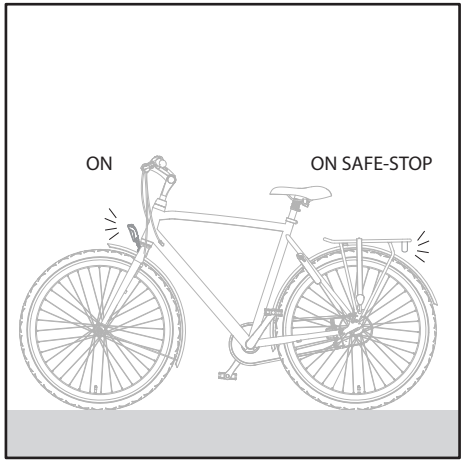

Since 1918.

PIMENTO LARGE DYNAMO SAFE-STOP

instruction manual