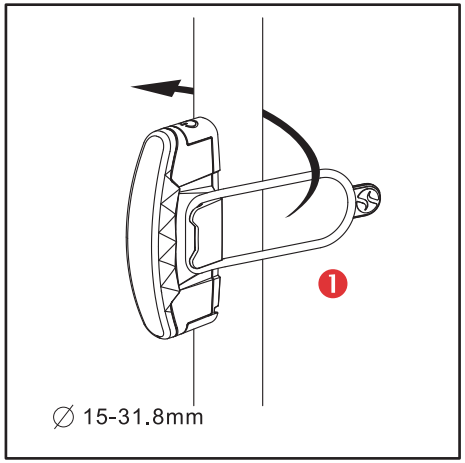

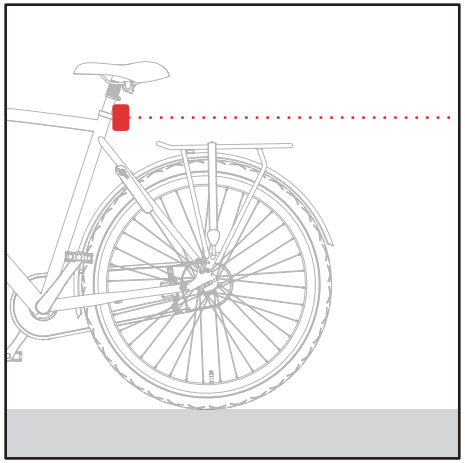

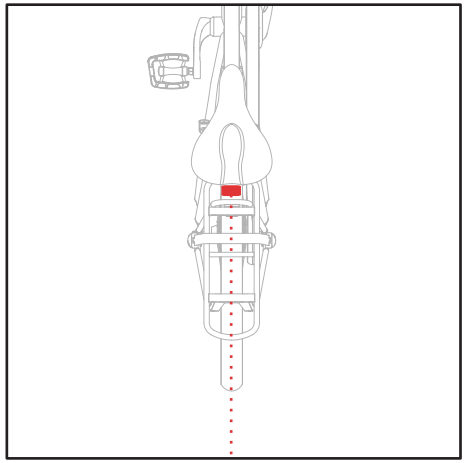

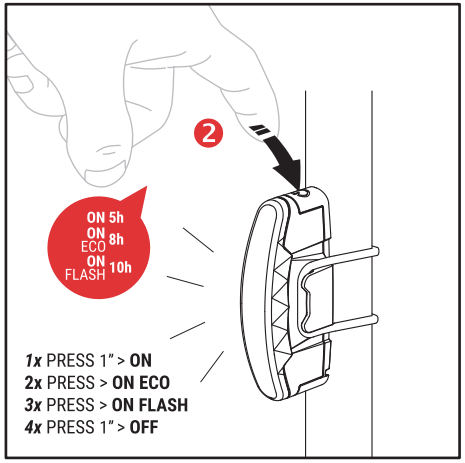

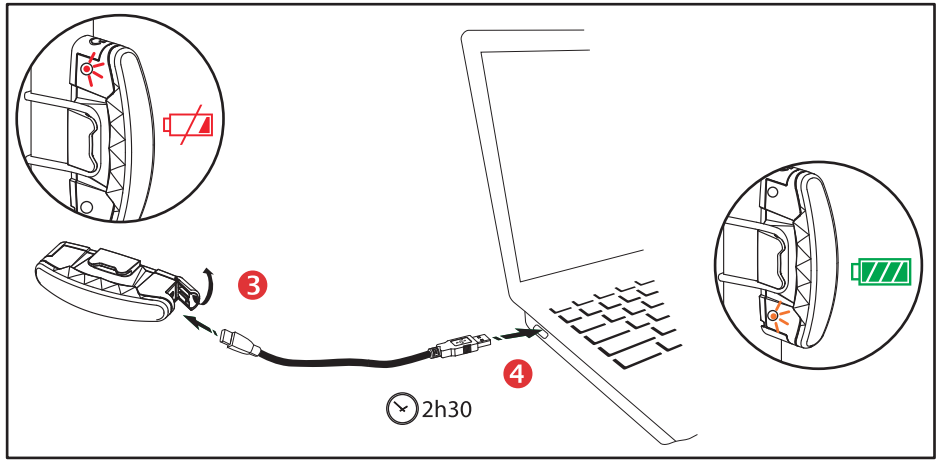

Since 1918.

ARCO REAR FLASH

instruction manual